REV	ECO	REV BY	DATE	APPD	DATE

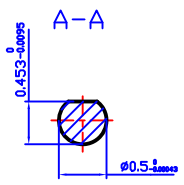

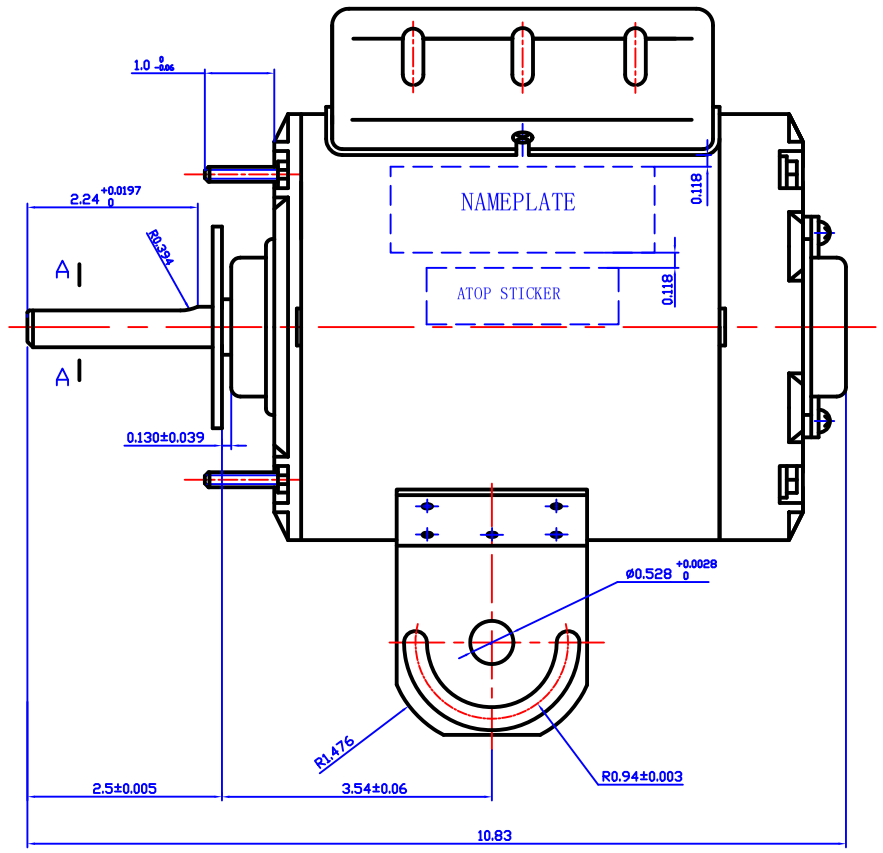

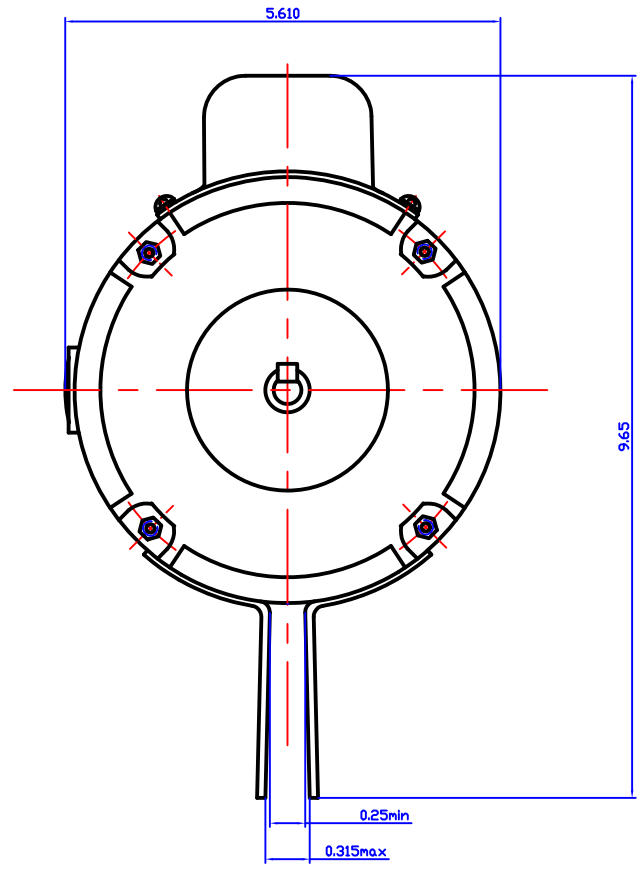

AGI REF#	FRAME	PH	HP	Hz	Pole	Volt	thermal protector	RPM
Y833	48Y	1	1/2	60	4	115/230	MEJ57RX	1725

DR BY:	Candy	AG-I	AG-I MOTORTEC INC.,
APPD:		DESCRIPTION	OUTLINE OF Y833
FIRST ANGLE PROJECTION	EDS DATE 1/28/2023	SIZE A3	DWG NO
	VERSION	SCALE 1:1.5	SHEET

CONFIDENTIAL PROPERTY OF GW ELECTRIC (SHANGHAI) CORPORATION AND ARE NOT TO BE DISCLOSED, DUPLICATED, OR OTHERWISE USED WITHOUT THE WRITTEN CONSENT OF GW ELECTRIC (SHANGHAI) CORPORATION, OR ITS AGENT, AG-I MOTORTEC INC.
- ALL RIGHTS RESERVED