REV	ECO	REV BY	DATE	APPD	DATE

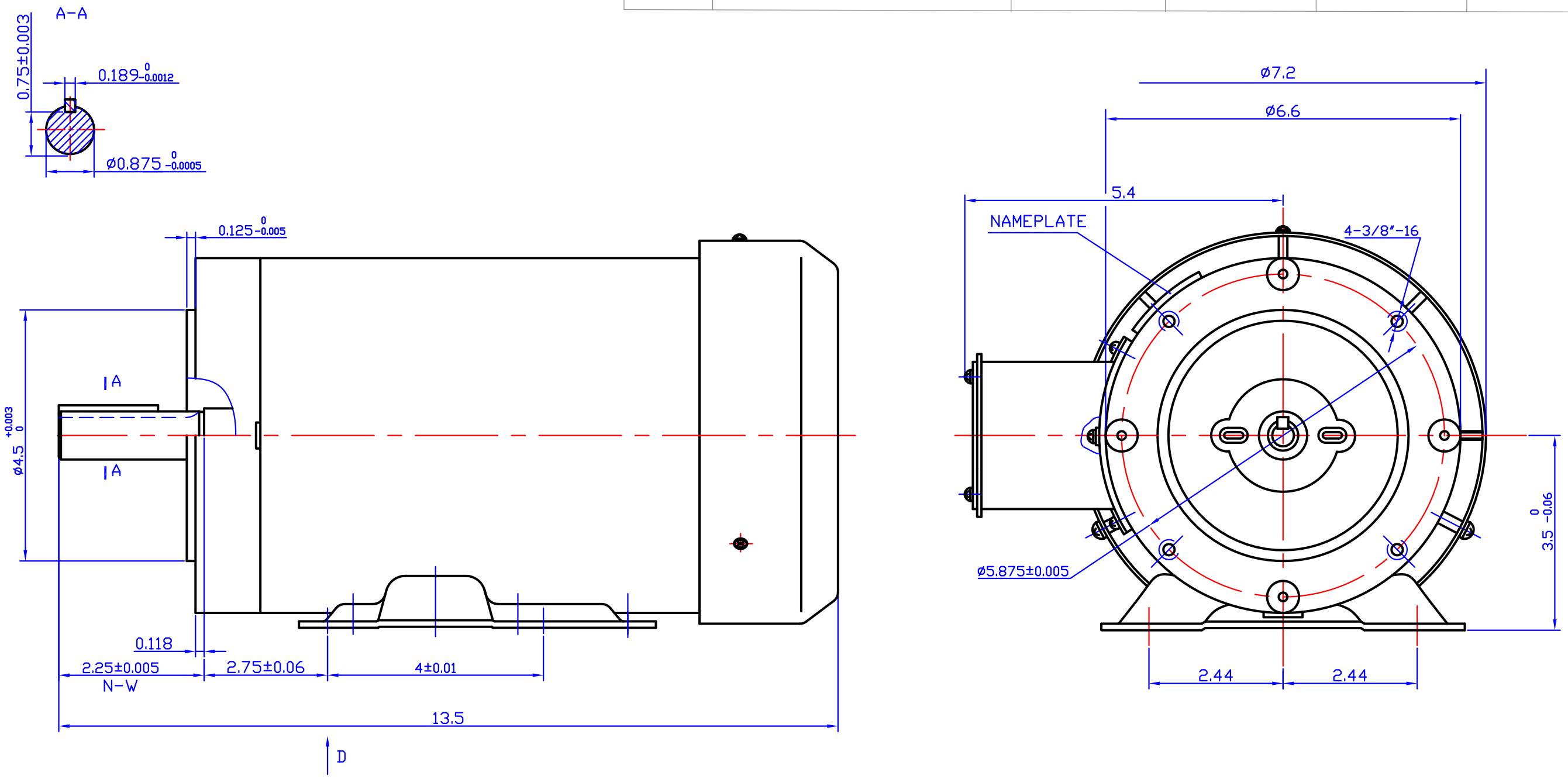

DIRECTION D

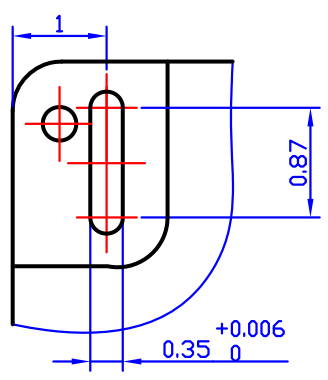

AGI REF.NO.	IND#	HP	VOLT	Hz	POLE	FRAME	ENCLOSURE
GWR1-4-575-143T	TC00CE	1	575	60	4P	143TC	TEFC

DR BY:	Candy	AG-I	AG-I MOTORTEC INC.,
APPD:		DESCRIPTION	TC00CE OUTLINE
FIRST ANGLE PROJECTION	EDS DATE / VERSION	SIZE A3	DWG NO
		SCALE 1:2	SHEET

CONFIDENTIAL PROPERTY OF GW ELECTRIC (SHANGHAI) CORPORATION AND ARE NOT TO BE DISCLOSED, DUPLICATED, OR OTHERWISE USED WITHOUT THE WRITTEN CONSENT OF GW ELECTRIC (SHANGHAI) CORPORATION, OR ITS AGENT, AG-I MOTORTEC INC.
- ALL RIGHTS RESERVED