REV	ECO	REV BY	DATE	APPD	DATE

A-A

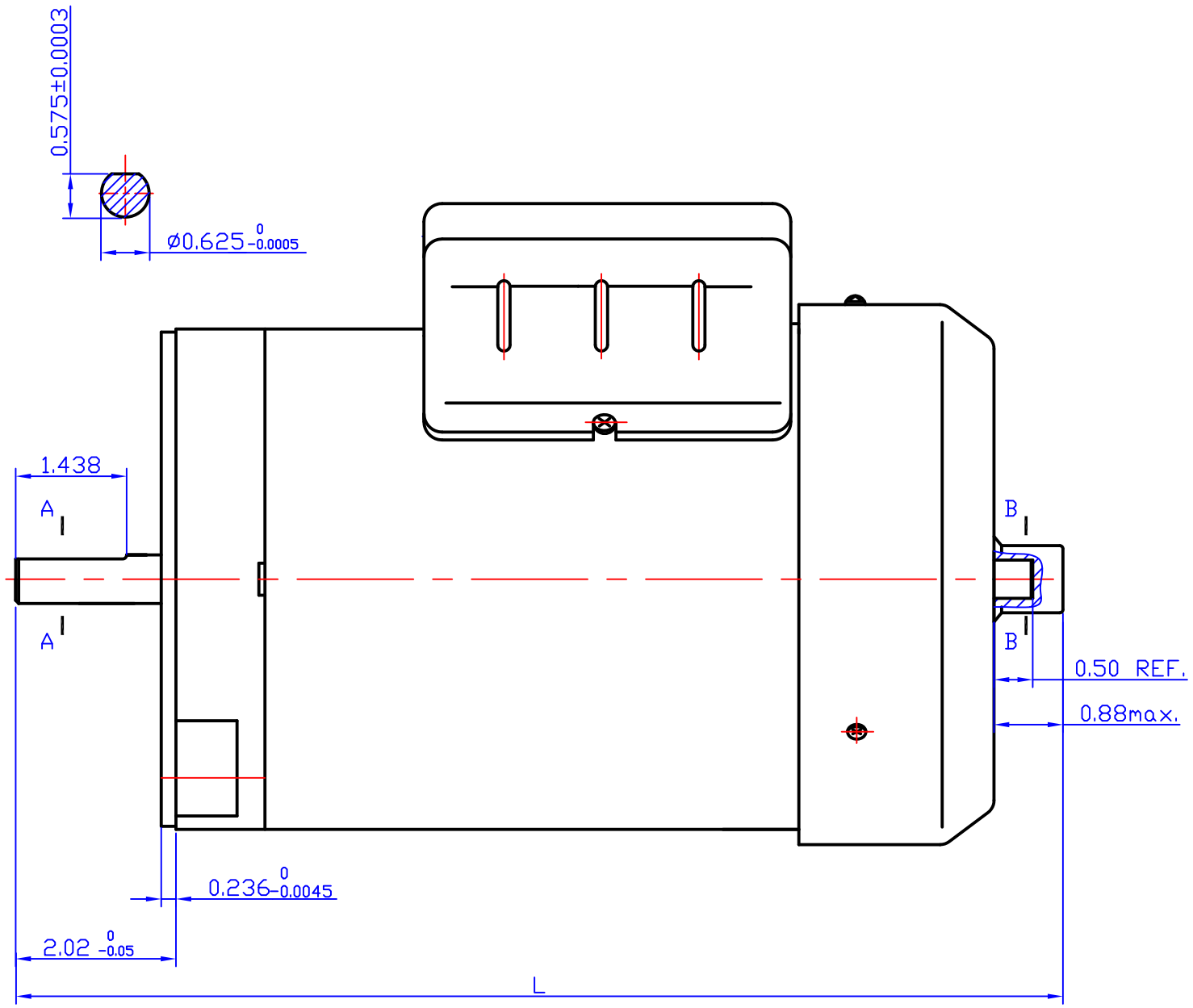

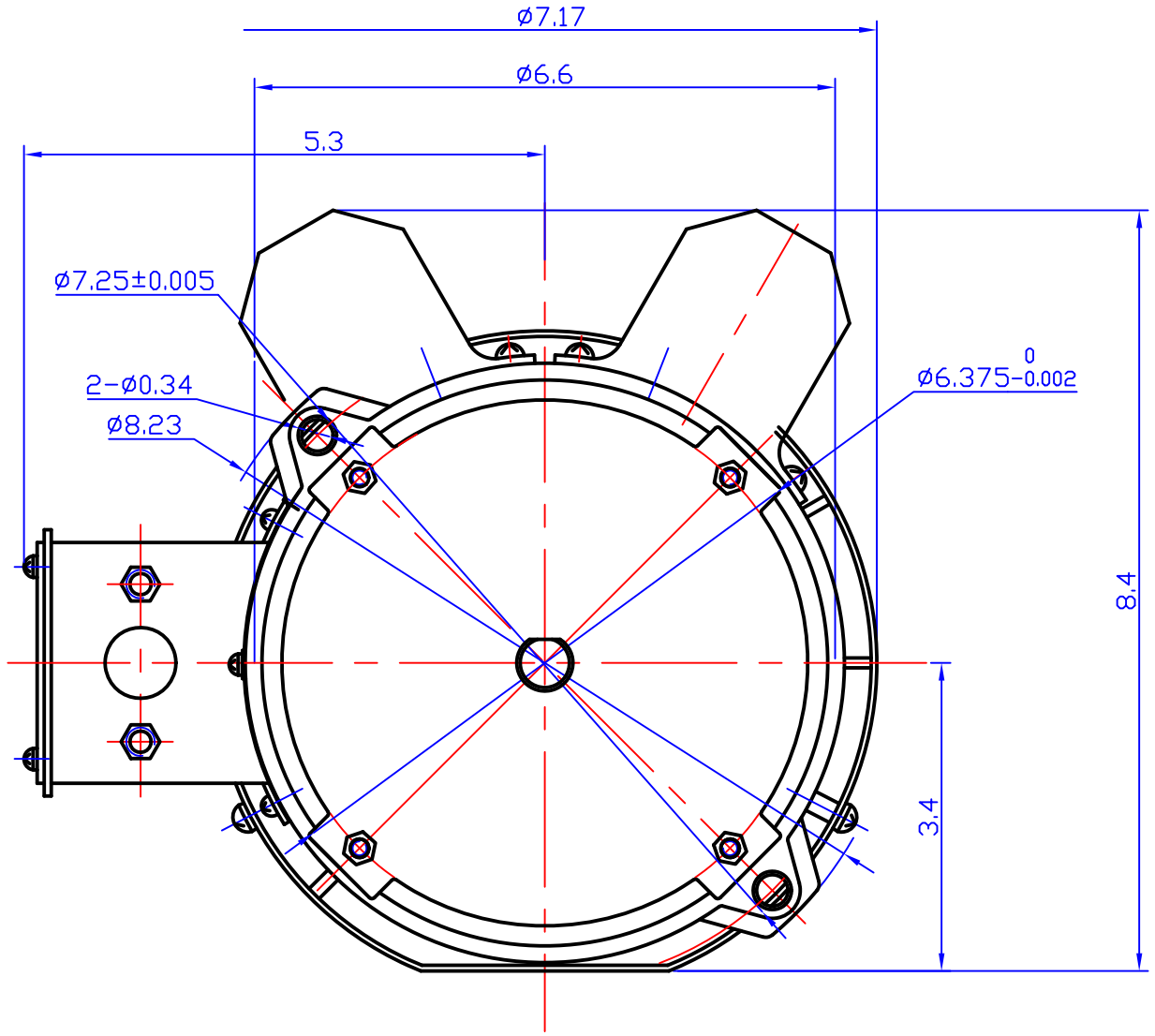

IND#	AGI REF.NO	VOLTS	FRAME	Hz	Pole	HP	RPM	PH	THERMALLY PROTECTED	L
K294-F	K104DF5NMAF	115/208-230	56NY	60	4	1.0	1745	1	MAN.	13.1
K295-F	K154DF5NMAF	115/208-230	56NY	60	4	1.5	1745	1	MAN.	13.5

B-B

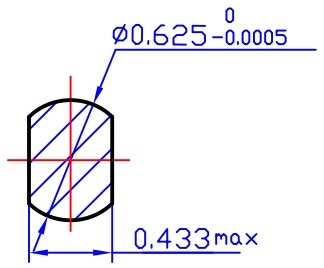

DR BY:	Candy	AG-I MOTORTEC INC.,	
APPD:		DESCRIPTION	
FIRST ANGLE PROJECTION	EDS DATE 10/28/2021	K294-F K295-F OUTLINE	
	VERSION B		
CONFIDENTIAL PROPERTY OF GW ELECTRIC (SHANGHAI) CORPORATION AND ARE NOT TO BE DISCLOSED, DUPLICATED, OR OTHERWISE USED WITHOUT THE WRITTEN CONSENT OF GW ELECTRIC (SHANGHAI) CORPORATION, OR ITS AGENT, AG-I MOTORTEC INC. - ALL RIGHTS RESERVED		SIZE A3	DWG NO
		SCALE 1:2	SHEET