REV	ECO	REV BY	DATE	APPD	DATE

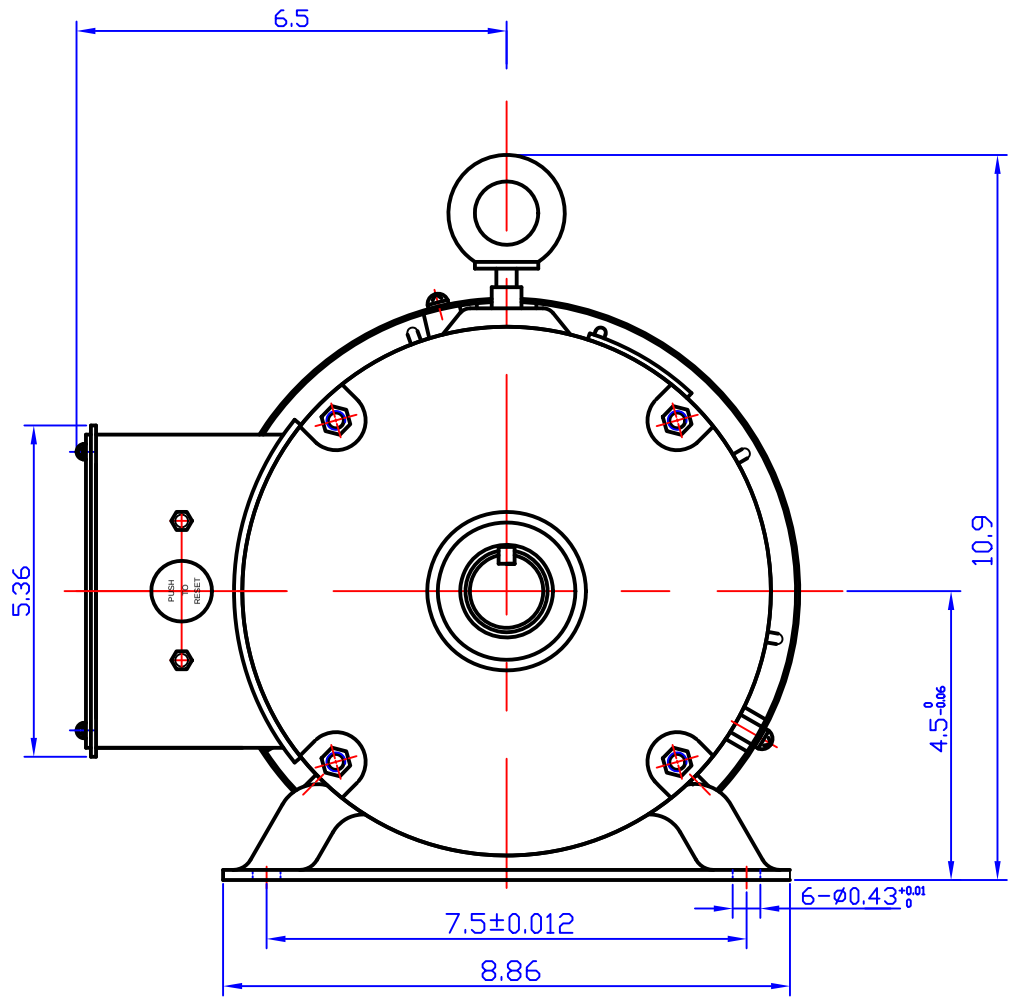

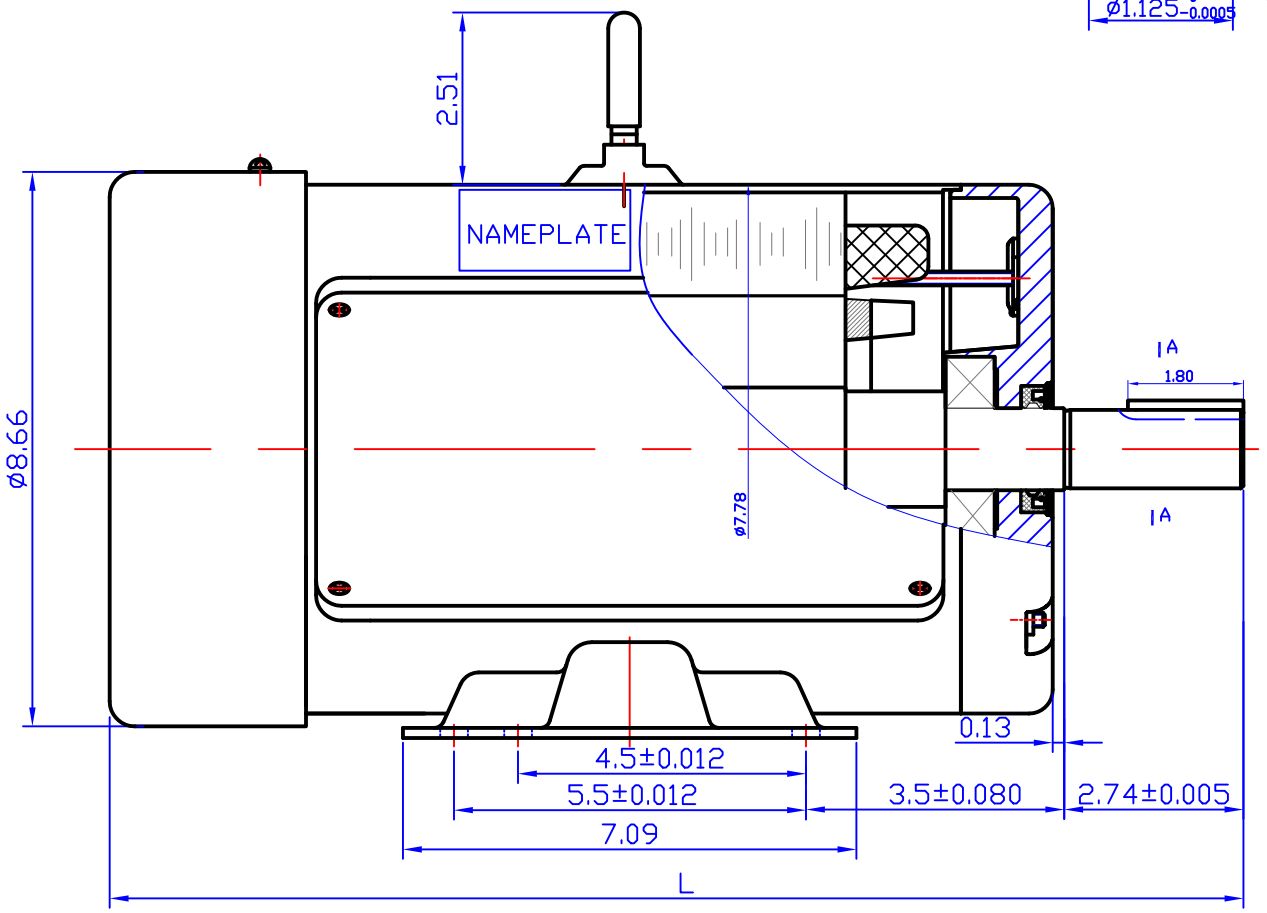

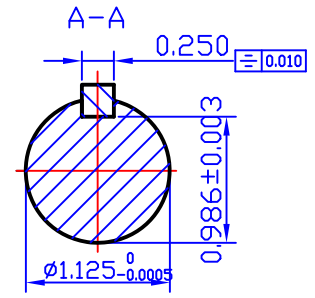

MODEL	IND#	FRAME	HP	VOLTS	Hz	RPM	S.F	DUTY	ENCL.	PH	THERMAL PROTECTOR	L
YCYN1804-3GW	K003	184T	3	230	60	1745	1.0	CONT.	TEFC	1	BRD3929	17.7

DR BY:

APPD:

FIRST ANGLE PROJECTION

EDS DATE

VERSION

CONFIDENTIAL: THIS DRAWING AND ITS INFORMATION ARE THE EXCLUSIVE AND CONFIDENTIAL PROPERTY OF GW ELECTRICAL (SHANGHAI) CORPORATION AND ARE NOT TO BE DISCLOSED, DUPLICATED, DISTRIBUTED OR OTHERWISE USED WITHOUT THE WRITTEN CONSENT OF GW ELECTRICAL (SHANGHAI) CORPORATION.
-ALL RIGHTS RESERVED.

AG-I MOTORTEC INC.,

DESCRIPTION

OUTLINE OF MOTORS FOR NEMA180 FR

SIZE A3

DWG NO

SCALE

SHEET