REV	ECO	REV BY	DATE	APPD	DATE
					7.21.2015

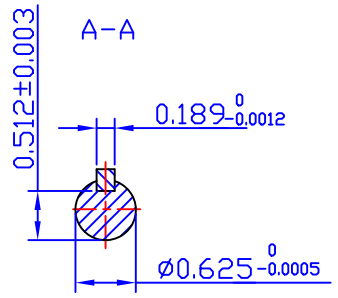

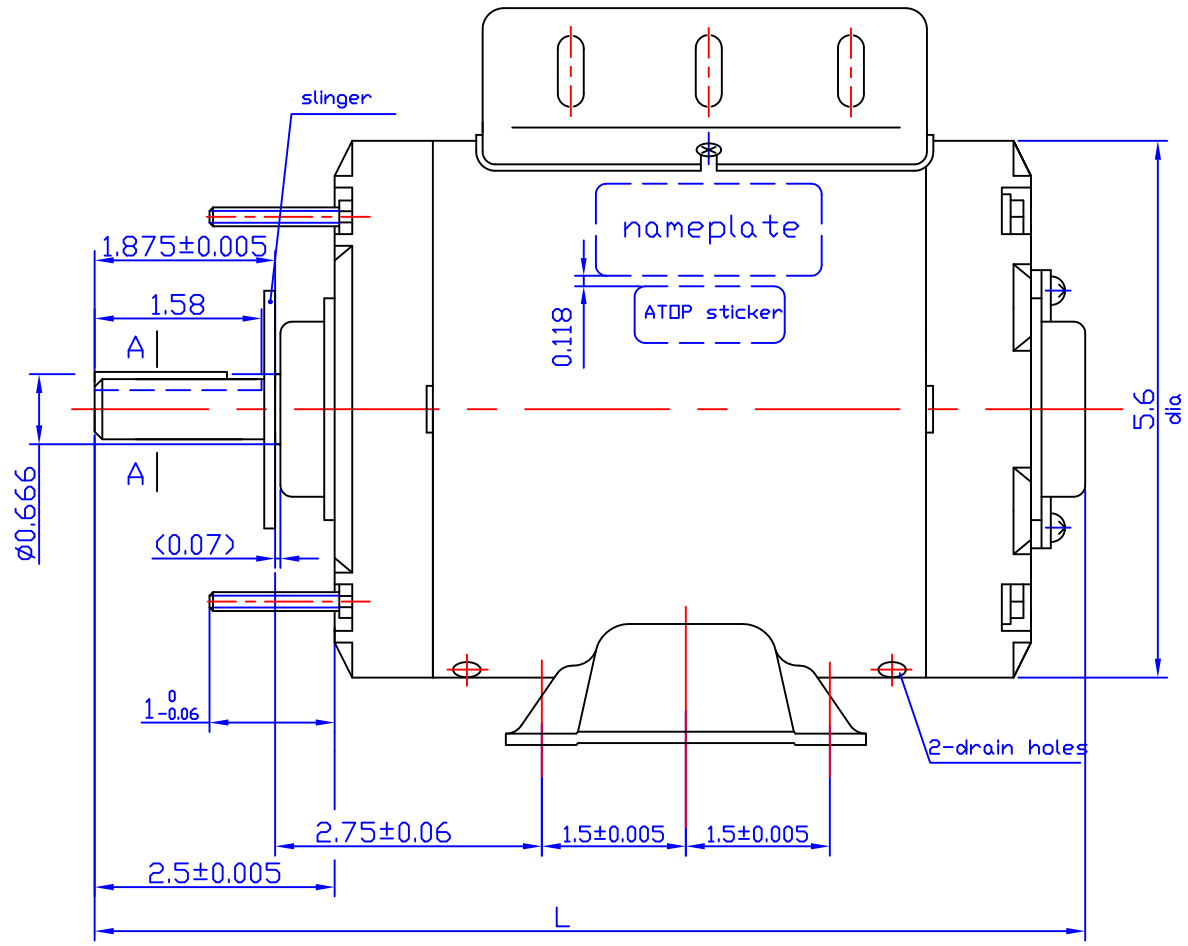

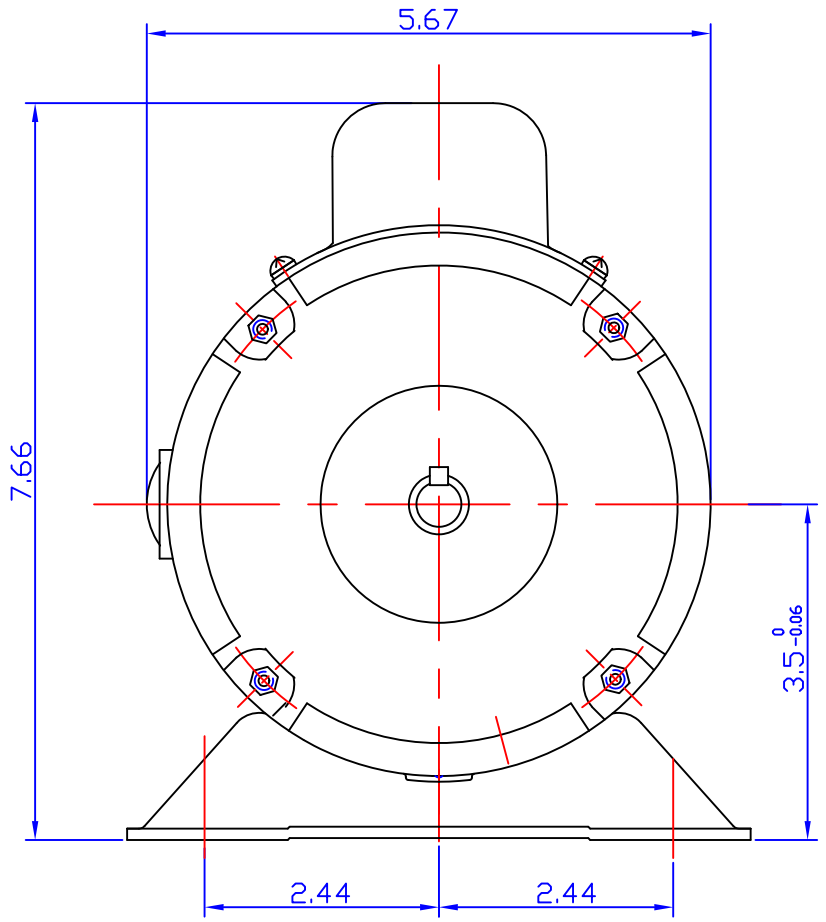

IND#	REF.NO	FRAME	PH	HP	Hz	Volt	thermal protector	RPM	L	2-drain holes
F816	F334DA4MA01	S56	1	1/3	60	115/230	MEG61RX	1725	10.8	WITH

DR BY:	Candy	AG-I MOTORTEC INC.,
APPD:		DESCRIPTION
FIRST ANGLE PROJECTION	EDS DATE / VERSION	AGI-021 OUTLINE
CONFIDENTIAL PROPERTY OF GW ELECTRIC (SHANGHAI) CORPORATION AND ARE NOT TO BE DISCLOSED, DUPLICATED, OR OTHERWISE USED WITHOUT THE WRITTEN CONSENT OF GW ELECTRIC (SHANGHAI) CORPORATION, OR ITS AGENT, AG-I MOTORTEC INC. - ALL RIGHTS RESERVED		SIZE A3 / DWG NO
		SCALE 1:1.5 / SHEET