REV	ECO	REV BY	DATE	APPD	DATE

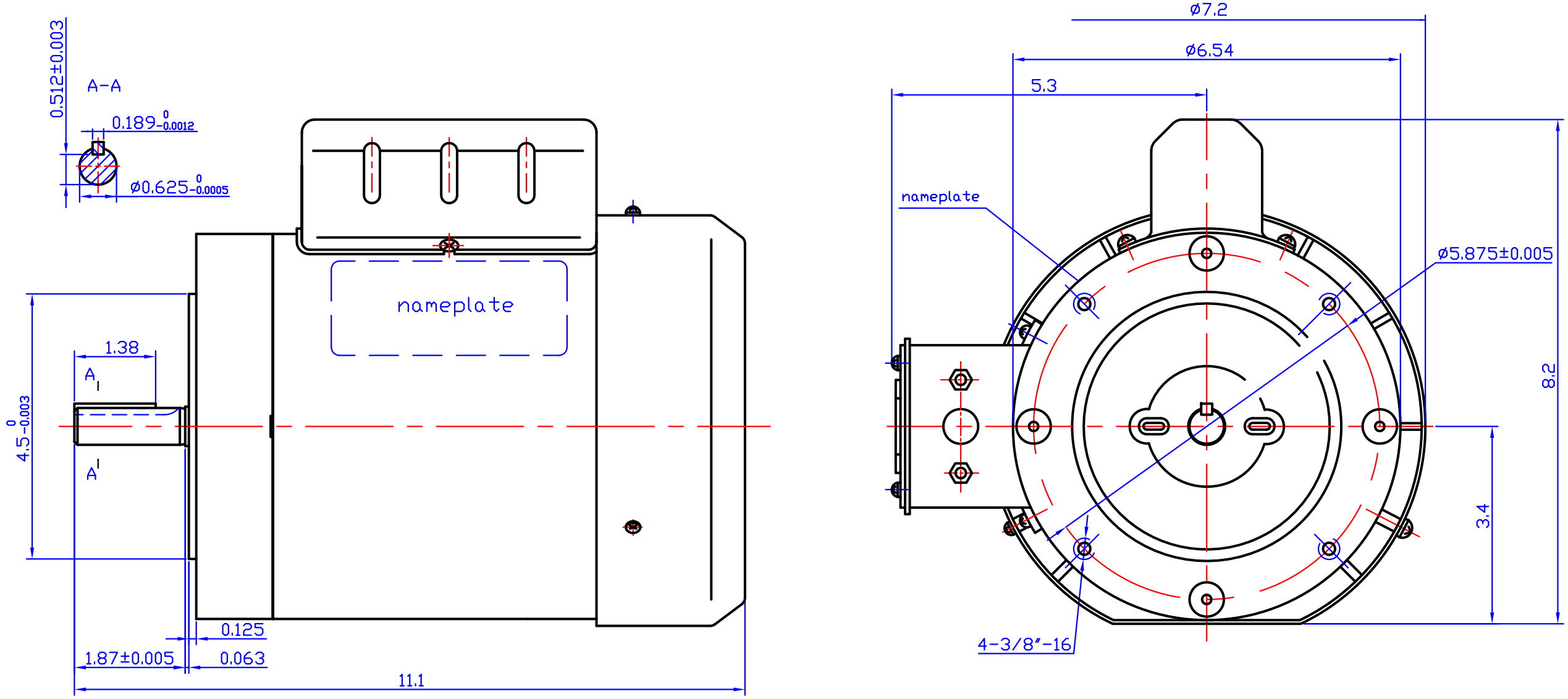

REF.NO.	IND#	FRAME	PH	HP	Pole	RPM	Hz	Volt	thermal protector
C054DF5CM00	C492	56C	1	1/2	4	1725	60	115/230	MAN

DR BY:		AG-I MOTORTEC INC.,
APPD:		DESCRIPTION: C492 OUTLINE
FIRST ANGLE PROJECTION	EDS DATE / VERSION	
CONFIDENTIAL PROPERTY OF GW ELECTRIC (SHANGHAI) CORPORATION AND ARE NOT TO BE DISCLOSED, DUPLICATED, OR OTHERWISE USED WITHOUT THE WRITTEN CONSENT OF GW ELECTRIC (SHANGHAI) CORPORATION, OR ITS AGENT, AG-I MOTORTEC INC. - ALL RIGHTS RESERVED		SIZE: A3 / DWG NO / SCALE: 1:2 / SHEET