REV	ECO	REV BY	DATE	APPD	DATE

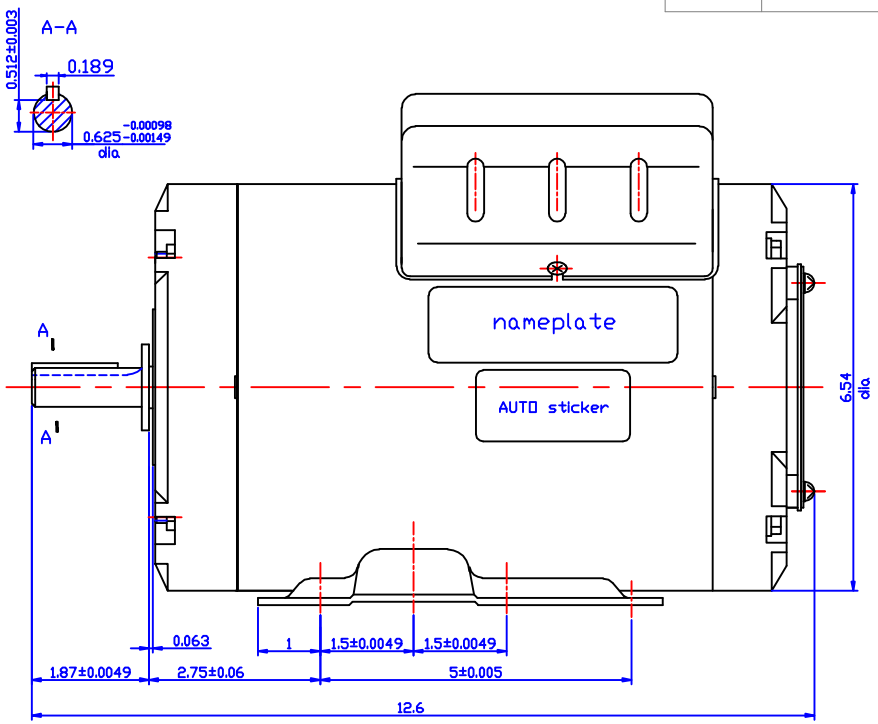

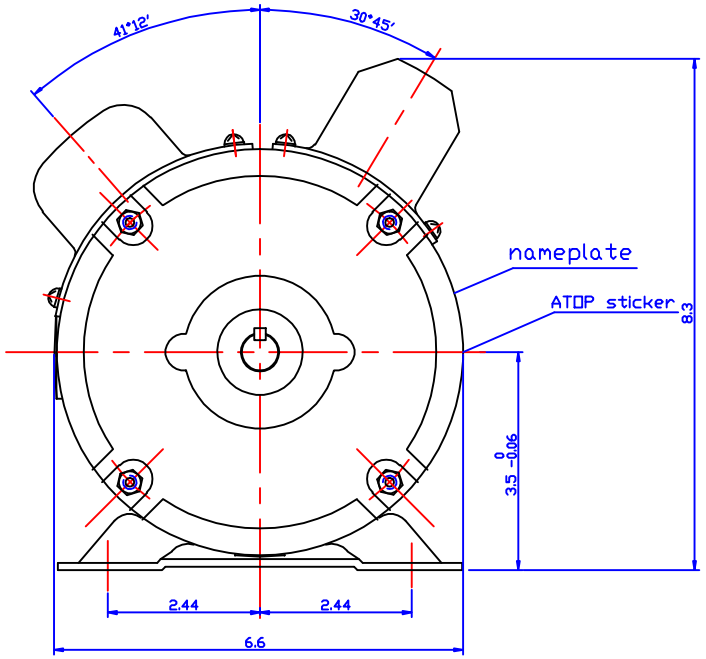

AGI IND#.	FRAME	PH	HP	Hz	Pole	Volt	RPM	thermal protector
A594	56	1	1.5	60	4	115/230	1725	CEJ38CY

DR BY:		AG-I MOTORTEC INC.,
APPD:		DESCRIPTION
FIRST ANGLE PROJECTION	EDS DATE / VERSION	A594 OUTLINE DRAWING
CONFIDENTIAL: THIS DRAWING AND ITS INFORMATION ARE THE EXCLUSIVE AND CONFIDENTIAL PROPERTY OF GW ELECTRICAL (SHANGHAI) CORPORATION AND ARE NOT TO BE DISCLOSED, DUPLICATED, DISTRIBUTED OR OTHERWISE USED WITHOUT THE WRITTEN CONSENT OF GW ELECTRICAL (SHANGHAI) CORPORATION. -ALL RIGHTS RESERVED.		SIZE A3 / DWG NO
		SCALE / SHEET